The Hobbit Stove
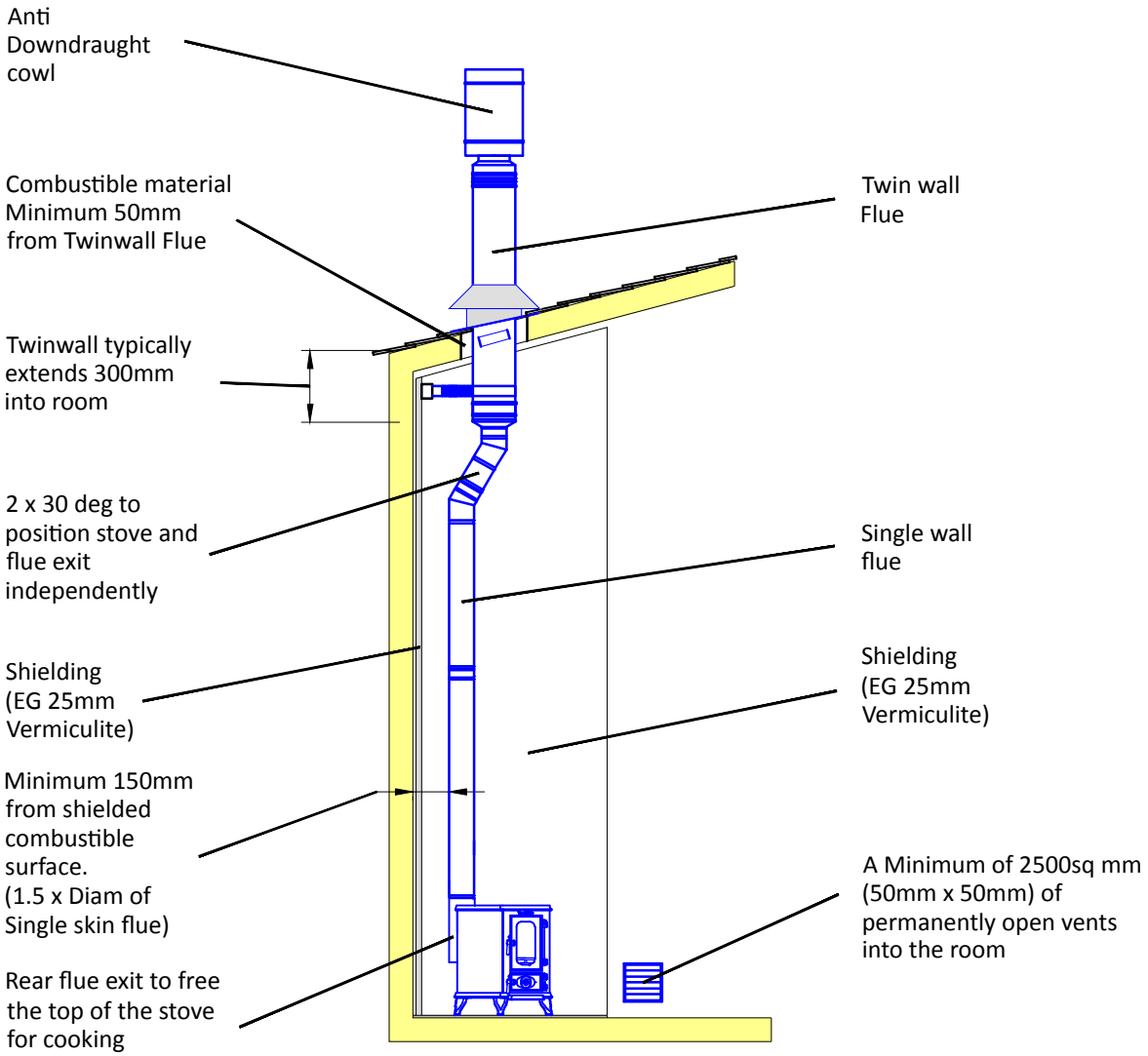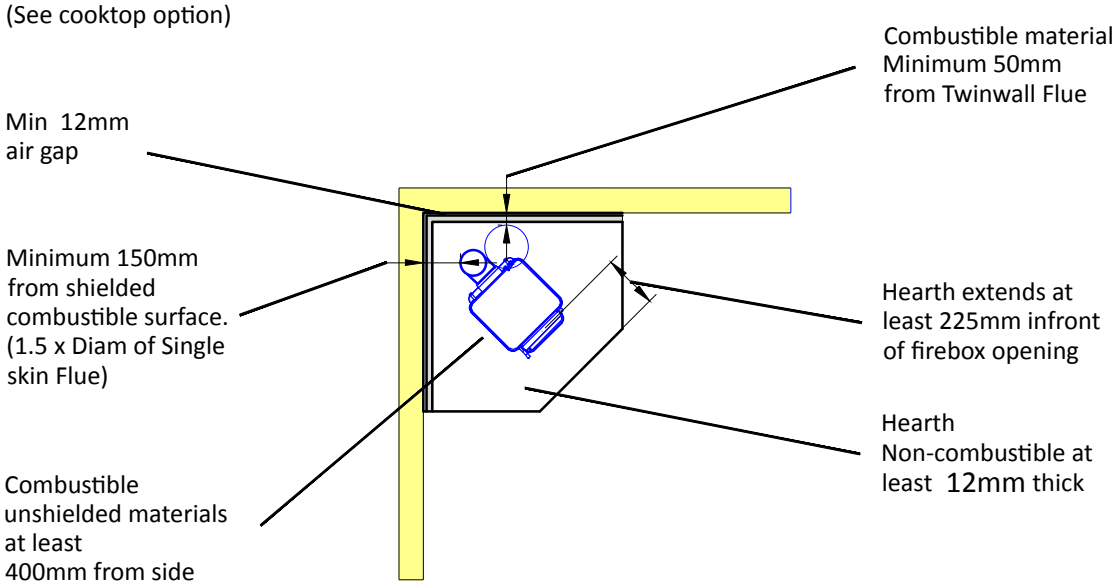
Typical arrangement for the corner installation of the Salamander Stove into a Garden Room or Tiny Home